

KD250CP0

Thin-section deep-groove ball bearings

KD type thin-section radial ball bearing, single row

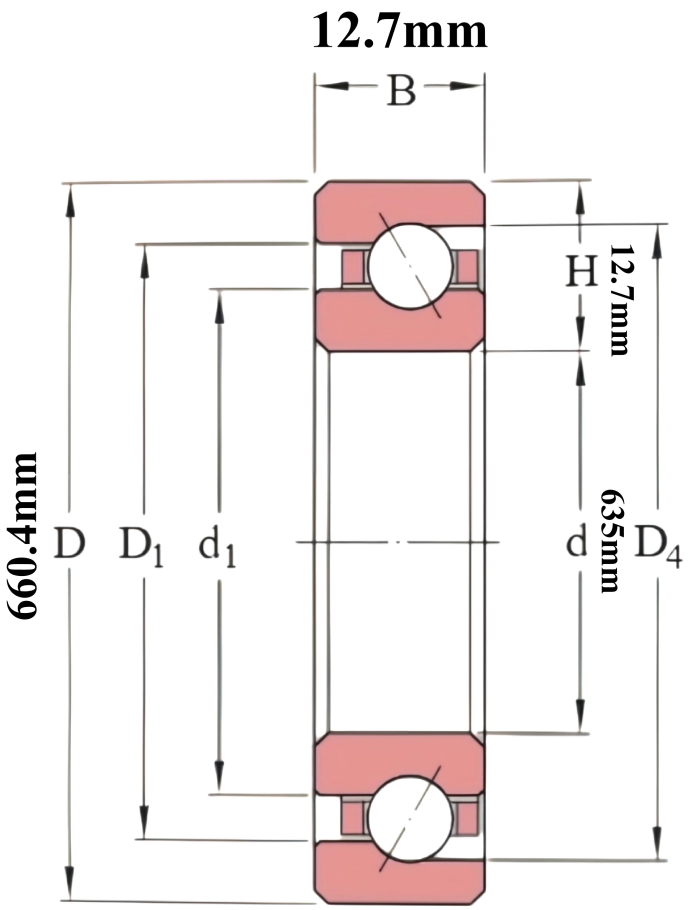

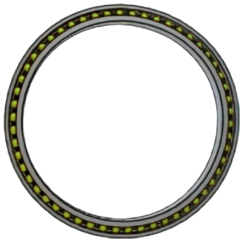

TKW® Professional Bearing Manufacturer	
KD250CP0 Thin Section Bearing	Email:sales@xrbearing www.electricallyinsulatedbearings.com

The data sheet only contains an overview of the technical data of the selected product.

Technical information

d	635mm/ 25in	aperture
D	660.4mm/ 26in	Outer diameter
H	12.7mm/ 0.5in	Radial cross section
B	12.7mm/ 0.5in	width
d1	≈644.398mm/ 25.37in	Inner ring flange diameter
D1	≈651.002mm/ 25.63in	Outer ring flange diameter
	6.35mm/ 0.25in	Sphere diameter
	1.524mm/ 0.06in	Maximum radius of chamfer on shaft or bearing housing

About us

XRB-ZWA BEARING INDUSTRY CO.,LIMITED. is a high-end precision bearing manufacturing enterprise integrating design, research and development and production. It focuses on high-precision hybrid ceramic ball bearings, ultra-thin section bearings, servo motor bearings, high-precision stainless steel bearings, vacuum pump bearings, magnetic levitation bearings, thin-walled crossed roller bearings, reactor bearings, all-ceramic bearings, food and beverage bearings, new energy vehicle bearings, excavator bearings, construction machinery bearings and special customized bearings, which can meet the needs of different working conditions.

Our products strictly adhere to international and domestic standards such as DIN24960, API610, API682, BS5257, ANSI, and GB, and are widely used in high-end manufacturing fields such as semiconductor equipment, automation equipment, robotics,

medical and pharmaceutical, petrochemical, and food and beverage industries. The company is equipped with a full set of automated precision production equipment, boasts strong R&D capabilities, and has established a comprehensive quality control system covering design, production, sales, and service. Relying on scientific management, we ensure the core advantages of our products: high precision, low noise, and long lifespan.

With its advanced technology, superior quality, and comprehensive services, the company continuously provides global customers with stable, reliable, and diversified bearing products and solutions.







Contact Us

Landry.W

Tel: +86-13280450757

Wechat: +86-13280450757

E-mail: Sales@xrbearing.com

Add: Guantao Bearing Industrial Zone, Handan City, Hebei Province, China.

www.electricallyinsulatedbearings.com